Atmel Debug Flash print for AT89C8252

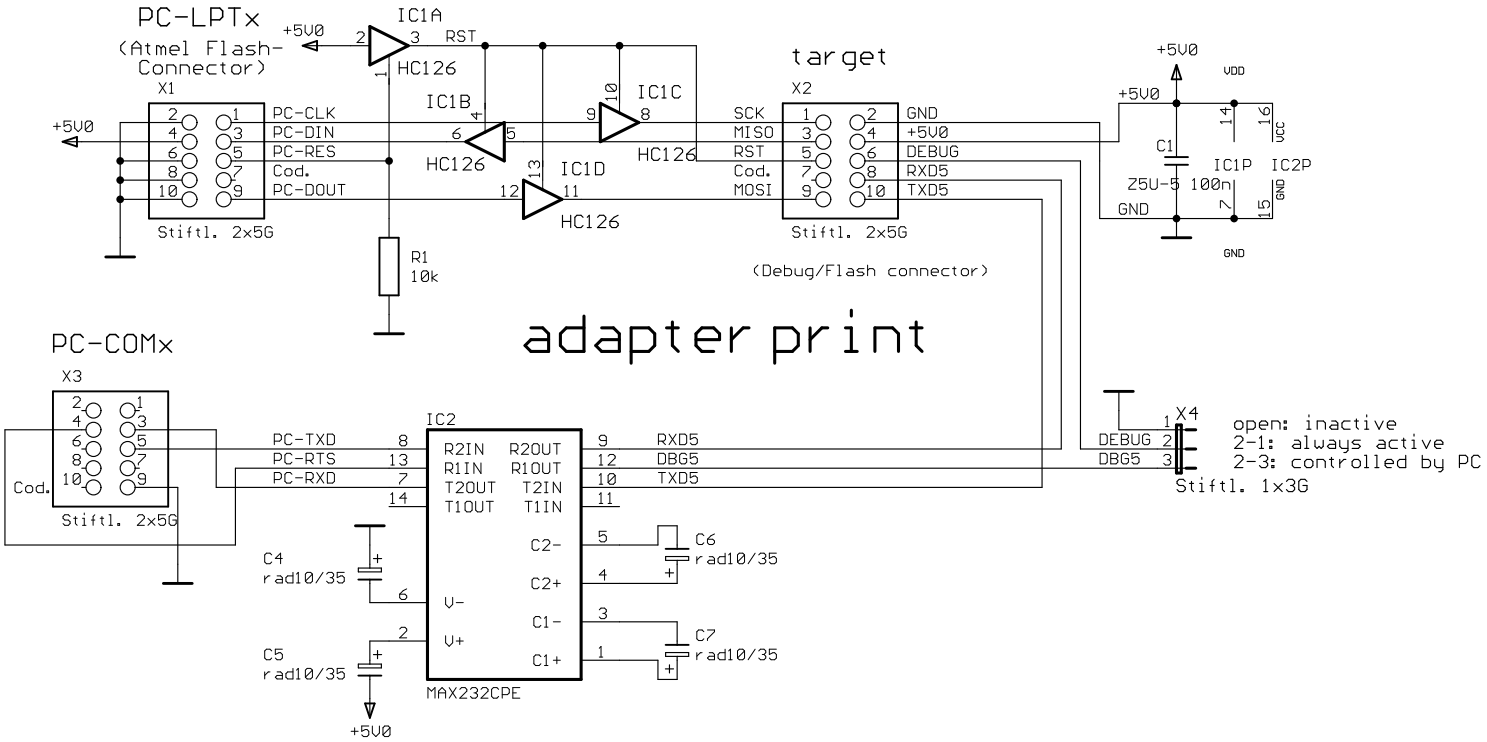

Pinbelegung

Sub.D		Stiftl.
1	DCD	1
2	RXD	3
3	TXD	5
4	DTR	7
5	GND	9
6	DSR	2
7	RTS	4
8	CTS	6
9	RI	8
	Cod.	10

Klaus Toscher
Mainbachstr. 16
Tel. +49 6442 24305
35606 Solms

TITLE: ADFA

created by: KTo

Document Number:
debug/flash print

REV: 1.0

Date: 22.06.2003 23:30:00

Sheet: 1/1